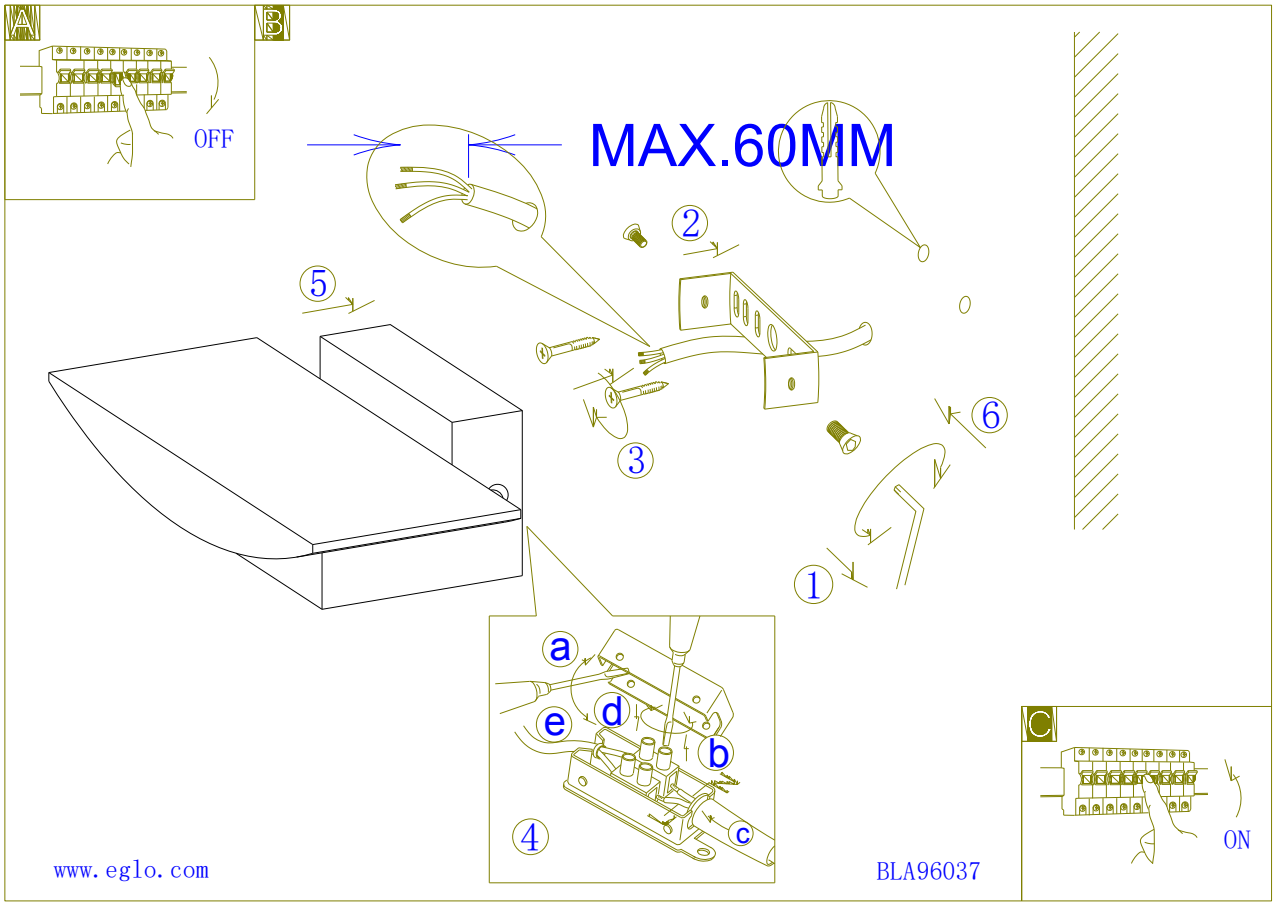

A5\U+5370\U+5236

SHENGDA	¶«Ý¸¶«½øÕÕÃ÷ÓÐÏÞ¹«Ë¾	\U+540D\U+79F0 96037 LED \U+5355\U+5934\U+58C1\U+706F	
\U+5236\U+58BD\U+8DC\U+658C		\U+8D27\U+53F7 96037	\U+7FB5\U+6837
\U+5BA1\U+6838		\U+901A\U+7528 96038	
\U+6279\U+51C6	\U+7248\U+6B20	\U+8D27\U+53F7	
\U+7248\U+6B21	\U+65E5\U+670F 2016.07.11		